Product Data Sheet

WM11 Range

PANORAMA ANTENNAS

M2M & ISM Band

Directional Antenna

- Directional
- ROHS Compliant
- GPRS
- SCADA
- UMTS

WM11

High gain at all frequencies
Wall mount or mast mount
Waterproof housing

The WM11 is a directional antenna. This makes point to point communication between machines at low power more reliable.

The multiband functionality enables the antenna to have a backup (fall back) frequency so that communication is never lost.

Flexible wall and mast mount options will suit any mounting position and a durable waterproof construction makes this antenna ideal for outdoor use.

Technical Drawing

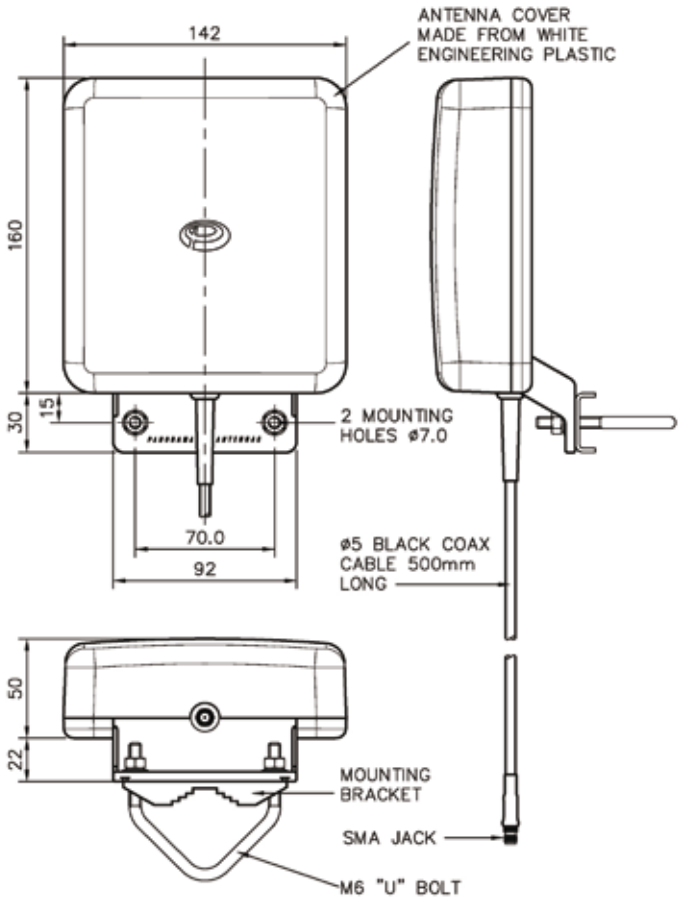

M2M & ISM Band

Directional Antenna

H-Plane (900MHz)

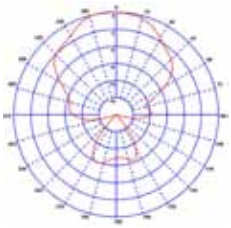

H-Plane (1800MHz)

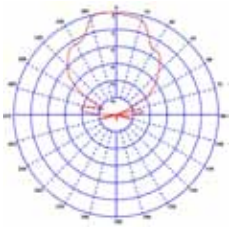

H-Plane (2000MHz)

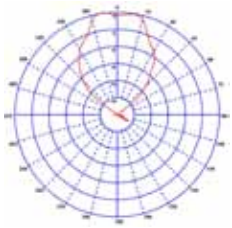

Typical VSWR

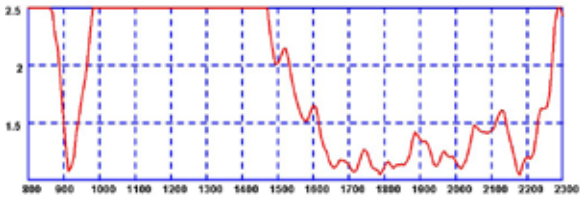

Part No.			
		WM11-AEP3G-05SJ	WM11-DEP3G-05SJ
Electrical Data			
Frequency Range (MHz)		805-894, 1710-1880, 1850-1990, 1990-2170	890-960, 1710-1880, 1850-1990, 1990-2170
Operational Band		AMPS800 / GSM850, GSM1800, PCS1900, 3G UMTS	GSM900, GSM1800, PCS1900, 3G UMTS
VSWR		≤ 2.0:1	≤ 2.0:1
Gain: Isotropic		8dBi (805-894), 9dBi (1710-1900), 11dBi (1900-2170)	8dBi (890-960), 9dBi (1710-1900), 11dBi (1900-2170)
Compared to ¼ wave		6dBi(805-894), 7dB (1710-1900), 9dB (1900-2170)	6dBi(890-960), 7dB (1710-1900), 9dB (1900-2170)
Pattern		Directional	Directional
Polarisation		Vertical	Vertical
Impedance		50Ω	50Ω
Max Input Power (W)		20	20
Mechanical Data			
Dimensions (mm)	Height	160	160
	Width	142	142
	Depth	50	50
Operating Temp (°C)		-40° / +80°C	-40° / +80°C
Material		Engineering Plastic	Engineering Plastic
Colour		White	White
Mounting Data			
Fixing		Wall mount or Mast mount	Wall mount or Mast mount
Pole Diameter (mm)		20 - 50	20 - 50
Environmental Specification			
Wind Load / Resistance		63N at 180km/h	63N at 180km/h
Wind Surface (m^2)		0.02	0.02
Cable Data			
Type		CS23	CS23
Thickness (mm)		5	5
Length (m)		0.5	0.5
Termination		SMA Socket	SMA Socket

Panorama Antennas Ltd
Frogmore, London, SW18 1HF, United Kingdom

T: +44 (0)20 8877 4444
F: +44 (0)20 8877 4477

E: sales@panorama-antennas.com
www.panorama-antennas.com

PANORAMA ANTENNAS